RELEASE NUMBER	REV LTR	REVISION DESCRIPTION	BY	DATE	APPD
P37133-01	A	INITIAL RELEASE	STK	01/22/09	JPD

1 SAME AS DTNA P/N WAB441 032 381 0

DELIVERY MUST CONFORM EXACTLY WITH DRAWING SPECIFICATIONS AND, WHERE REQUIRED BY Q.A., WITH APPROVED Q.A. SAMPLES. ABSOLUTELY NO CHANGES ARE PERMITTED WITHOUT PRIOR APPROVAL BY DTNA. THIS INCLUDES CHANGES TO: SOFTWARE, MATERIALS, INTERNAL COMPONENTS, MANUFACTURING PROCESSES.

ITEM NUMBER TBBN155882

DESCRIPTION SENSOR-ABS,2000,40X16,STR CCS

DAIMLER

Daimler Trucks North America

THE INFORMATION CONTAINED HEREIN IS PROPRIETARY DATA, AND IS NOT FOR DISSEMINATION OR DISCLOSURE, IN WHOLE OR IN PART, FOR ANY PURPOSE OTHER THAN THAT FOR WHICH IT ISSUBMITTED, EXCEPT AS AUTHORIZED IN WRITING BY DAIMLER TRUCKS NORTH AMERICA LLC (DTNA)

UNLESS OTHERWISE NOTED, DIMENSIONS AND TOLERANCES ARE DEFINED ACCORDING TO ASME Y14.5M- 1994, WITH EXCEPTION PER DTNA 09ENG-WI037

MATERIAL APPROVAL: J.DAVIS	DATE: 01/22/09		
DRAWN BY: S.KEZIAH	DATE: 01/22/09	THIRD ANGLE PROJECTION	UNITS OF MEASURE: Mm
RESPONSIBLE ENGINEER: S.KEZIAH	DATE: 01/22/09	CHECKED BY: T.BOSTIC	DATE: 01/22/09
MFG ENG/PURCH AGENT: M.SMALL	DATE: 01/22/09	APPROVED BY: J.DAVIS	DATE: 01/22/09

DESCRIPTION: SENSOR-ABS,2000,40X16,STR CCS

SUPPLEMENTAL DESCRIPTION: 41404

ITEM/DRAWING NUMBER	REVISION LETTER	PAGE
TBBN155882	A	1 of 2

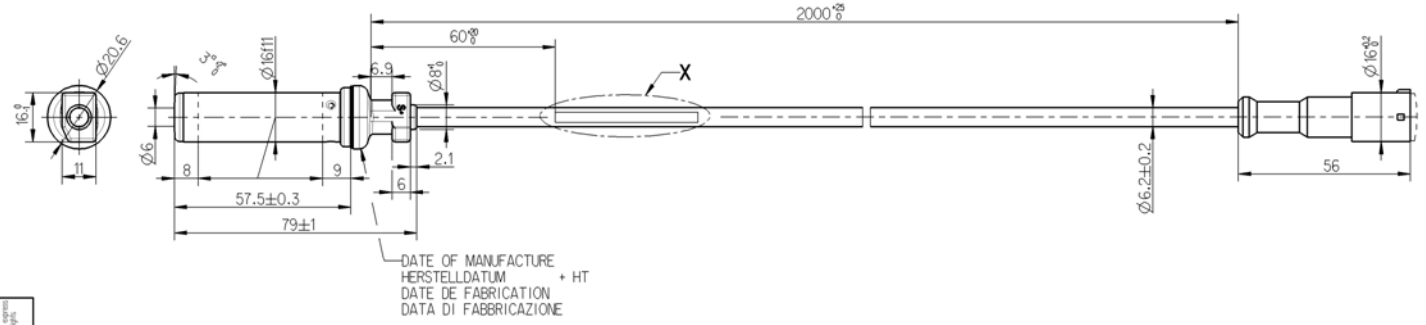

MADE IN GERMANY *

X
2:1

WABCO 441 032 381 0

PART NO
TEILE NR. *
NO. DE PIECE
CODICE

TWO CORE CABLE
LEITUNG ZWEIADRIG
CABLE A DEUX CONDUCTEURS
CAVO A DUE CONDUTTORI
} CCS 2x0.5mm²

STRAIN RELIEF CABLE
ZUGENTLASTUNG KABEL
ARRET DE CABLE
SCARICO DI TRAZIONE DEL CAVO
} MAX.50N ϑ -20°C

BEND RADIUS CABLE
BIEGERADIUS KABEL
RAYON DE COURBURE DE CABLE
RAGGIO DI CURVATURA DEL CAVO
} R 15 MIN. ∢ 90°

* ABRASION RESISTANT PRINT
ABRIEBFESTER AUFDRUCK
IMPRESSION RESISTANTE A L' ABRASION
IMPRONTA RESISTENTE ALL' ABRASIONE
} RAL 9001

THERMAL RANGE OF APPLICATION FOR SENSOR
THERMISCHER ANWENDUNGSBEREICH FUER SENSOR
GAMME D'APPLICATION THERMIQUE POUR SENSOR
CAMPO TERMICO D'APPLICAZIONE DEL SENSORE
} -40°C...+150°C +180°C[1h]

THERMAL RANGE OF APPLICATION FOR CABLE
THERMISCHER ANWENDUNGSBEREICH FUER KABEL
GAMME D'APPLICATION THERMIQUE POUR CABLE
CAMPO TERMICO D'APPLICAZIONE DEL CAVO
} -40°C...+150°C +180°C[1h]

THERMAL RANGE OF APPLICATION FOR CONNECTOR SOCKET
THERMISCHER ANWENDUNGSBEREICH FUER KUPPLUNGSDOSE
GAMME D'APPLICATION THERMIQUE POUR CONNECTEUR FEMELLE
CAMPO TERMICO D'APPLICAZIONE DEL CONNETTORE
} -40°C...+80°C

FURTHER TECHNICAL DATA SEE PRODUCT SPECIFICATION
WEITERE TECHNISCHE DATEN SIEHE PRODUKT SPEZIFIKATION
AUTRES DONNEES TECHNIQUES VOIR PRODUCT SPECIFICATION
ULTERIORI DATI TECNICI VEDERE SPECIFICA DI PRODOTTO
} 441 032 381 0

INSTRUCTIONS OF INSTALLATION SEE ADAPTATION SPECIFICATION
EINBAUHINWEISE SIEHE ADAPTIONS-SPEZIFIKATION
INSTRUCTIONS D'INSTALLATION VOIR SPECIFICATION D'ADAPTION
ISIRUZIONI D'INSTALLAZIONE VEDERE SPECIFICA D'ADATTAMENTO
} 441 032 100 0

DEGREE OF PROTECTION (IN CONNECTION WITH PLUG)
SCHUTZART (IN VERBINDUNG MIT KUPPLUNGSSTECKER)
DEGRE DE PROTECTION (DANS CONNECTION AVEC CONNECTEUR MALE)
GRADO DI PROTEZIONE (IN COLLAGAMENTO CON SPINOTTO)
} IP 68 <—> ISO 20653
IP 69 K <—> DIN 40050 BL.9

1:1

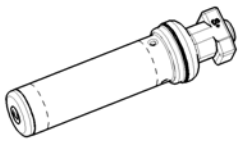

General Specification: JED-334-0
Further Technical Data:
Doc. Code: Sheet: To
General Tolerances JED-261

Class 1)	Range of Nominal Dimensions (± mm) ≤ 50	> 50 ≤ 180	> 180 ≤ 400	> 400	∢
Fine	0.5	1.0	1.5	2.0	
Medium	1.0	2.0	3.0	4.0	±3°
Coarse X	2.0	3.5	5.0	6.5	

Tapped Holes acc.
1) Tolerance Class Applied Crossmarked

DCN-No. | Rev. | Date
State of Revision

Copyright WABCO *
Date | Signature
Drawn: 2008-01-23 Harnischmacher
Checked
Expert: Harnischmacher

Mass: 0.100 KG | Scale: 1:1 2:1
Size: A 2 | TRI: 530

WABCO

INDUCTIVE SENSOR WITH SOCKET
STABSENSOR MIT KUPPLUNGSDOSE
CAPTEUR AVEC CONNECTEUR FEMELLE
SENSORE INDUTTIVO CON CONNETTORE

Material No.: 441 032 381 0
WABCO id. No.: 441 032 381 0
Doc.Code: 005 | Language: en/de fr/it | Sheet: 1/1
Function Code | CAD System: Pro/E | Prod.Type: 0 1 X
Replacement for: 884 011 353 0

100mm

Tous droits sur ce document, y compris la reproduction et la communication de son contenu sont interdits, sauf autorisation expresse. Tout manquement à cette règle constitue un délit évident et expose son auteur au versement de dommages et intérêts. Tous droits réservés en cas de délivrance de brevet ou d'enregistrement d'un modèle d'utilité.

Vorstehende Rechte, insbesondere das Recht der Vervielfältigung dieser Unterlage, Verwertung und Mitteilung ihres Inhalts, nicht ausdrücklich zugestanden, zuwiderhandelnden erlegen schadensersatzpflichtig. Alle Rechte für den Fall der Patenterteilung oder Gebrauchsmustereintragung vorbehalten.

Ceci le personne consigne a terzi o riprodurre questo documento, né utilizzarne il contenuto o renderlo comunque noto a terzi senza autorizzazione esplicita. Ogni infrazione costituisce un illecito evidente e comporterà il risarcimento dei danni subiti.

Copyright of this document and giving it to others and the use or communication of the contents thereof, are forbidden without express authority. Contravention of this rule will constitute a civil offence and result in a liability for payment of damages. All rights are reserved in the event of the grant of a patent or registration of a utility model or design. This document is the subject of copyright.

THE INFORMATION CONTAINED HEREIN IS PROPRIETARY DATA, AND IS NOT FOR DISSEMINATION OR DISCLOSURE, IN WHOLE OR IN PART, FOR ANY PURPOSE OTHER THAN THAT FOR WHICH IT ISSUBMITTED, EXCEPT AS AUTHORIZED IN WRITING BY DAIMLER TRUCKS NORTH AMERICA LLC (DTNA)	DAIMLER	Daimler Trucks North America	ITEM/DRAWING NUMBER TBBN155882	REVISION LETTER A	PAGE 2 of 2