COMPUTER ORIGINAL -- DO NOT MAKE MANUAL CHANGES

| Vendor Part#: | Description |
|---|---|
| BW 229938 | Cover Treadle Asm |
| BW 235212 | Roll Pin |
| BW 236979 | Mounting Plate |
| BW 236980 | Stop Button |
| BW 236981 | Plunger |
| BW 236982 | Boot |
| BW 286171 | Brake Valve Basic |
| BW 297643 | Pin |

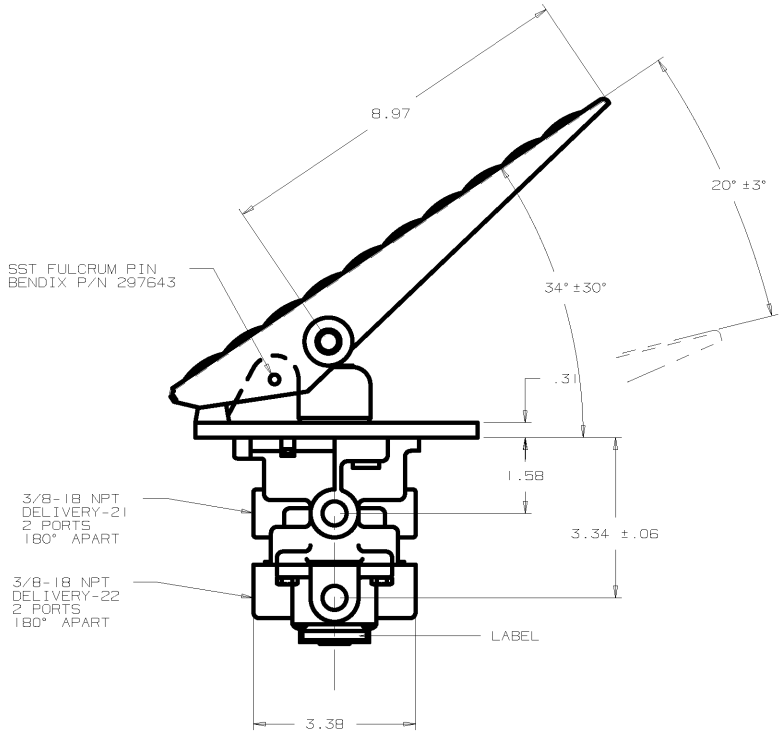


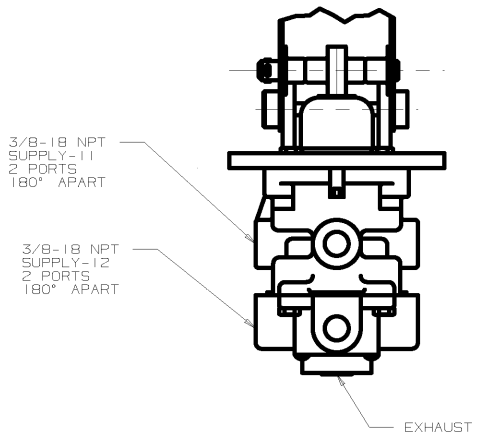


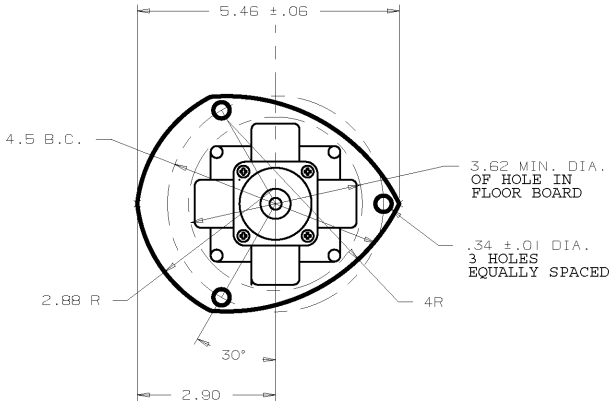


| VENDOR | PART NO. |
|---|---|
| BENDIX | #109420 |

THIS DRAWING AND ALL INFORMATION PROVIDED WITH IT ARE THE PROPERTY OF THOMAS BUILT BUSES, INC. ANY REPRODUCTION OR DISTRIBUTION OF THIS MATERIAL OR ANY PART WITHOUT WRITTEN PERMISSION OF THOMAS BUILT BUSES, INC. IS STRICTLY PROHIBITED.
COPYRIGHT 1997 THOMAS BUILT BUSES, INC.

| LET | REVISION | DATE | BY | CF |
|---|---|---|---|---|
| A | RELEASED | C-5490 10/04/93 | KDN JCD | JP |

THOMAS BUILT BUSES, INC.
HIGH POINT, NC WOODSTOCK, CANADA

THIRD ANGLE PROJECTION

TOLERANCE UNLESS OTHERWISE NOTED

| DECIMAL | FRACTIONAL | ANGULAR |
|---|---|---|
| .XXX .015<br>.XX .03<br>.X .06 | ±1/32 | ±1/2° |

VALVE, DUAL BRAKE,
E-6 TREADLE TYPE
W/SST FULCRUM PIN

| | | | |
|---|---|---|---|
| DRN. 09/22/93 | BY KDN | MAT'L | |
| CK'D. 09/22/93 | BY JCD | SIZE C | DWG. NO. 61170227 |
| MFG. | BY | | |
| SCALE 1/2 | | | |


COMPUTER ORIGINAL -- DO NOT MAKE MANUAL CHANGE